EXPROX-001/ACE-0

ATEX EXPLOSION PROOF PROXIMITY CARD READER

INSTRUCTION MANUAL

REV.0

(04 July 2018)

Model EXPROX-001/ACE-0

Revisions
Rev.0: Original design……..04 July 2018

PRONOR **N.V.**
Liefkensstraat 35A
B-9032 GENT
TEL: (+) 32-9-257 08 80
www.pronorbelgium.com
E-mail: info@pronor.be

MODEL *EXPROX-001*

(ACE-0 with 714-52 reader)

ATEX EXPLOSION PROOF PROXIMITY CARD READER

IP66 ATEX proximity card reader with ACEPROX 714-52 reader for tank terminal facilities

Model EXPROX-001/ACE-0
ATEX certified proximity card reader

FEATURES AND BENIFITS

- Small design, allows easy integration
- ATEX approval II 2 G / Ex db IIC T6 Gb and ATEX II 2 D / Ex tb IIIC T85°C IP66
- Includes one (1) explosion proof gland for entering reader cable .
- Clear LED indication indicating acceptation of card. (Red, yellow, green)
- Pre-assembled with screw terminals for easy field connection.

The model EXPROX-00/ACE-0 is an explosion proof proximity card reader suitable for applications on tank terminal area or any other area which has ATEX classified zones.

The model EXPROX-001/ACE-0 has been provided with an 13,56MHz reader and requires connection to a door controller unit *(Not included in this part number)* which will provide also the required power supply for the EXPROX-001 reader. No external power supply to the reader is allowed.

Specifications.

General

Construction	: Marine grade copper free grey coloured aluminium housing. Painted marine coating RAL6024 (green).
Mounting	: Wall mounted with two hinges. Use bolt M8.
Glands	: One (1) explosion proof gland 3/4" NPT.
Protection	: ATEX II 2 G / Ex db IIC T6 Gb and ATEX II 2 D / Ex tb IIIC T85°C IP66.
Connection	: by screw terminal max 0,5mm2.
Dimensions (ØxD)	: 160x144mm
Shipping weight/net	: 3kg/2,14Kg including gland.

Card reader :

Model	: ACEPROX 714-52 Mifare® ID Reader
Power	: 5-13,6VDC at 35/100mA (Average/Peak). Linear power supply recommended.
Format	: Selectable. Output formats supported: Wiegand (66 bit, 44 bit, 34 bit odd/even parity, 34 bit odd/odd parity, 26 bit), Mag stripe emulation, Clock/Data, RS232 (9600,n,8,1) with both EIA compatible levels and TTL levels.
Reading distance	: 2,5 cm (passive key card and power at 12VDC.)
Temperature range	: -20°C to +60°C and 95% humidity non condensing.
Indicator	: Acceptance LED Red, yellow, green. Beeper included.

PRONOR **N.V.**
Liefkensstraat 35A
B-9032 GENT
TEL: (+) 32-9-257 08 80
www.pronorbelgium.com
E-mail:info@pronor.be

GENERAL DESCRIPTION.

The EXPROX-001 ATEX explosion protected proximity reader has been designed for access control systems in hazardous areas.

The EXPROX-001 consist of an ATEX rated heavy duty aluminium epoxy coated casting with a chemical resistant viewing window.

The EXPROX-001 can be provided with several types of reader in order to make easy integration into any type of access control system.

The EXPROX-001 needs connection to a door controller of the same system as the card reader built inside the EXPROX-001.

Packaging contents.

The EXPROX-001 kit consist of:

1) One (1) EXPROX-001 housing pre-assembled with:
   - A proximity card reader.
   - Screw terminal block.
   - An ATEX approved brass gland 3/4" with rubber 8-10mm.

2) One (1) User manual which includes the ATEX certification.

1) MECHANICAL SPECIFICATIONS.

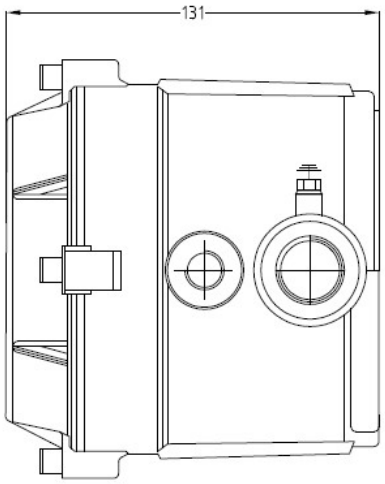

BOTTOM VIEW

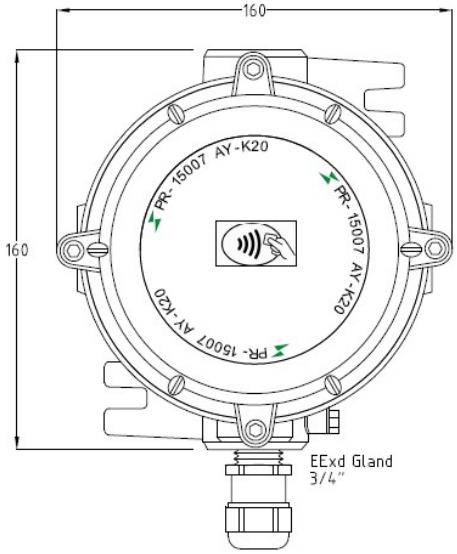

FRONT VIEW

2) INSTALLATION.

1) Find a place to install the EXPROX-001.
2) Drill two holes (M6) and fix the reader.
3) Unscrew the cover and insert the connection cable through the gland and make connection to the screw terminals as per drawing which correspond with the type of reader installed into the unit.
4) Follow the directions of the card reader manufacturer regarding the type of cable to be used as well the maximum length allowed.

CE

EU Directives covered by this declaration:
72/9/EC Low Voltage Directives
89/336/EEC Electromagnetic Compatibility Directive
94/9/EC Equipment or Protective System for use in Potentially Explosive Atmospheres.

PRONOR **N.V.**
Liefkensstraat 35A
B-9032 GENT
TEL: (+) 32-9-257 08 80
www.pronorbelgium.com
E-mail: info@pronor.be

c-line/ cl_3sp.dwg

Model: EXPROX-001/ACE-0

FRONT VIEW

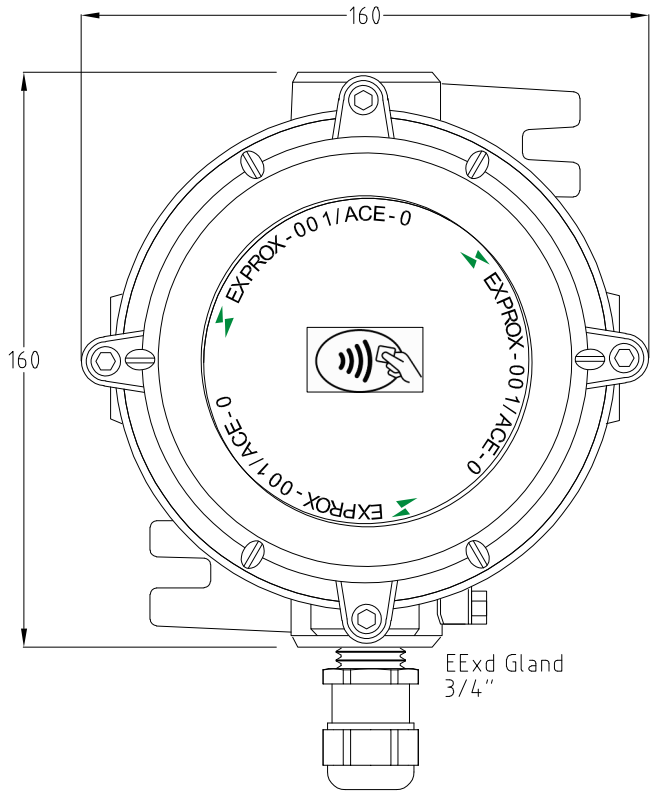

BOTTOM VIEW

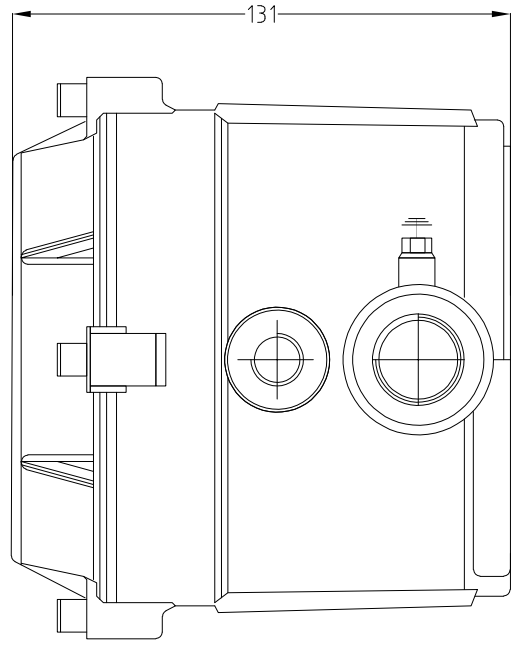

INSIDE VIEW

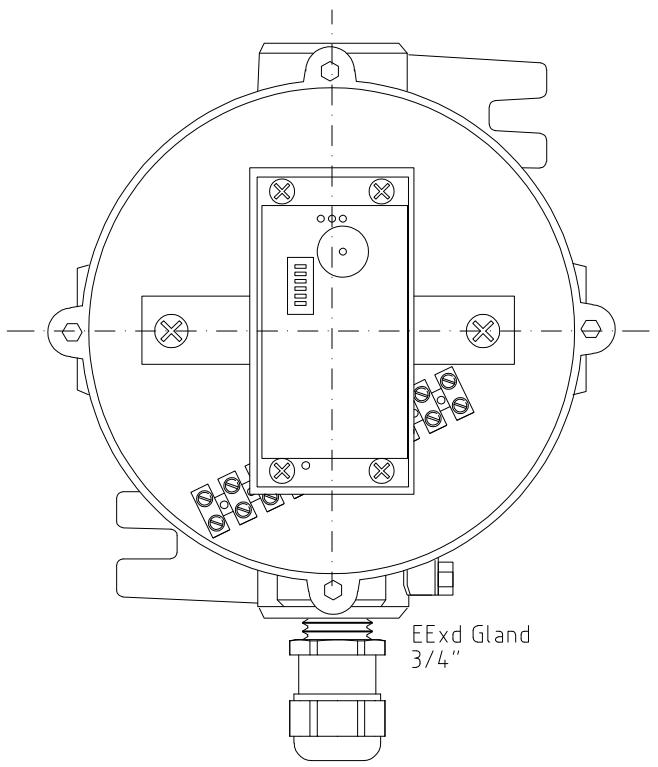

INTERNAL WIRING

(may vary upon type of Reader)
(connections shown for 714-52 Mifare® ID Reader)

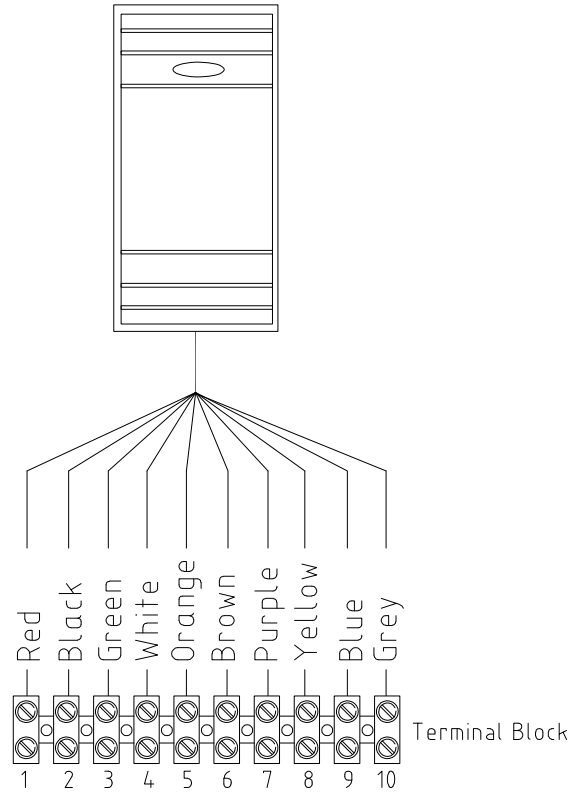

SIDE VIEW

(Position of Approval label)

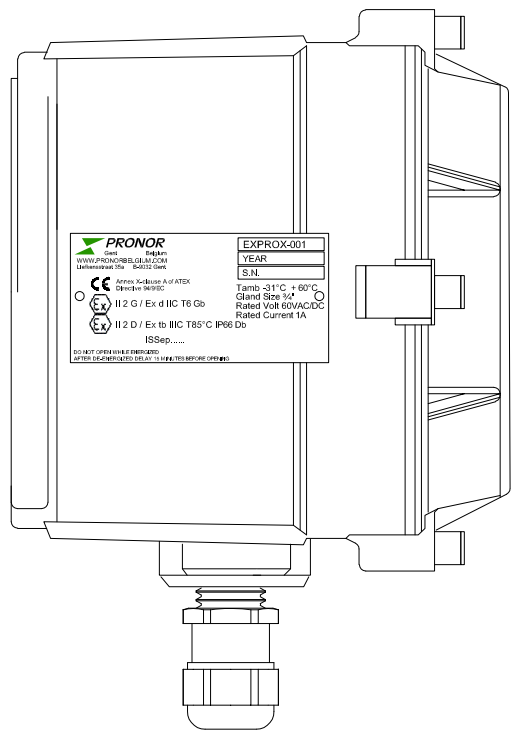

LABEL DETAIL

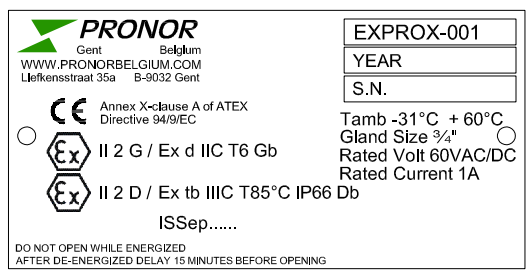

EX. BOX	EMH9.2 Explosion Proof Box w/ Window or Equivalent	
	ATEX II 2G/D, EExd IIC T6, IP66 Dimensions 160x160x131mm.	
	Painted Marine Coating Green RAL 6024	
Card Reader	714-52 Mifare® ID Reader	
Terminal Strip	10-strip Terminal Block	

1	Red	Power
2	Black	Ground
3	Green	Green LED
4	White	Clock/Data 0/TTL Tx
5	Orange	Red LED
6	Brown	Data/Data 1
7	Purple	RS232 Tx
8	Yellow	Yellow LED
9	Blue	Beeper
10	Grey	Present

EXPROX-001/ACE-0 — PRONOR SA

OUTLINE/WIRING DRAWING — BELGIUM — GENT

			REVISIONS	DATE	CAD NAME
DRAWN	P. VERHELST				
DATE	04-07-2018				
CHKD					
APPD					
PROJ.					

PRONOR Gent Belgium
WWW.PRONORBELGIUM.COM

DRAWINGNUMBER

factory	plnt	subj	srt	type	sheet
1111	000	ACC	M	0	035

FORM. A3 — PAGE

ISSeP
Institut scientifique de service public
Métrologie environnementale
Recherche - Analyses
Essais - Expertises

Siège social et site de Liège :
Rue du Chéra, 200
B-4000 Liège
Tél : +32(0)4.229.83.11
Fax : +32(0)4.252.46.65

Site de Colfontaine :
Zoning A. Schweitzer,
rue de la Platinerie
B-7340 Colfontaine
Tél : +32(0)65.61.08.11
Fax : +32(0)65.61.08.08

e-mail :
direction@issep.be
site web :
http://www.issep.be

(1)

EC TYPE EXAMINATION CERTIFICATE

(2)

Equipment or protective system intended for use in potentially explosive atmospheres Directive 94/9/EC

(3) EC type examination certificate number: **ISSeP16ATEX0015X**

(4) Equipment or protective system: Proximity Car Reader EXPROX-001

(5) Applicant – Manufacturer – ~~Authorized representative in the Community~~:
PRONOR N.V.

(6) Address: Liefkensstraat 35A
9032 GENT
Belgium

(7) This equipment or protective system and any acceptable variation thereto is specified in the schedule to this certificate and the documents therein referred to.

(8) ISSeP, notified body N° 0492 in accordance with article 9 of the Council Directive 94/9/EC of 23 March 1994, certifies that this equipment or protective system has been found to comply with the Essential Health and Safety Requirements relating to the design and construction of equipment and protective systems intended for use in potentially explosive atmospheres given in annex II to the Directive.

The examination and test results are recorded in confidential report N° 15158

(9) Compliance with the Essential Health and Safety Requirements has been assured by compliance with the documents:
- EN 60079-0 :2012 +A11 : 2013 (IEC 60079-0 :2011)
- EN 60079-1 :2014 (IEC 60079-1 :2014)
- EN 60079-31 :2014 (IEC 60079-31 :2013)

(10) If the symbol "X" is placed after the certificate number, it indicates that the equipment or protective system is subject to special conditions for safe use specified in the schedule to this certificate.

(11) This EC TYPE EXAMINATION CERTIFICATE relates only to the design, examination and tests of the specified equipment or protective system in accordance to the Directive 94/9/EC. Further requirements of this Directive may apply to the manufacturing process and supply of this equipment or protective system. These are not covered by this certificate.

(12) The marking of the equipment or protective system shall include the following indications:

Ex II 2 G Ex db IIC T6Gb
Ex II 2 D Ex tb IIIC T85°C Db IP66

Colfontaine, 14.03.2016.

Lambert Marcel,
Directeur.

INSTITUT SCIENTIFIQUE DE SERVICE PUBLIC
Zoning A. Schweitzer, rue de la Platinerie
B-7340 COLFONTAINE (Wasmes)
Tél: + 32 65 610811 – Fax: + 32 65 610808
colfontaine@issep.be

This certificate may only be reproduced in its entirety and without any change, schedule included

Wallonie

(13) **SCHEDULE**

(14) **EC TYPE EXAMINATION CERTIFICATE NR ISSeP16ATEX0015X**

(15) Description of the equipment or protective system

EXPROX-001 proximity card reader composed of:one Ex db and Ex tb certified enclosure foreseen with Exdb and Ex tb certified cable glands containing one proximity card reader

Marking

- Name and address of the manufacturer (or his registered trade mark).
- EC marking (Refer to Annex X-clause A of ATEX Directive 94/9/EC).
- Manufacturer's type identification.
- Serial number.
- Year of manufacture.
- Indication of testing station followed by the reference of the certificate.
- Specific marking of explosion protection and code:

  Ex II 2 G Ex db IIC T6Gb

  Ex II 2 D Ex tb IIIC T85°C Db IP66

- DO NOT OPEN WHEN ENERGIZED

- Electrical parameters: rated voltage and rated current or rated power.
- Temperatures: -31 °C ≤ Ta ≤ +60 °C
- Additional marking required by the applicable standards for the construction of the electrical apparatus.: 16V 140mA max

Routine tests (Clause 27 of EN 60079-0)
None

(16) Report N° 15158 of the 03.03.2016 composed of 10 pages and 11 document whose:
Instruction manual Rev.0 dated of 10.11.2015
Drawing Nr 1111000ACCM0020 titled EXPROX-001 rev 0 dated of 22.10.2015

(17) Specials conditions for safe use: Symbol X: : For use in potentially explosive atmosphere due to combustible dust:
-The surface of the different joints shall be covered with grease, for example
-User shall perform a regular cleaning of material to limit dust layers on the material sides.

(18) Essential Health and Safety Requirements

The Essential Health and Safety Requirements are covered by:

- The conformity to the standards listed at (9).
- All safety measures taken by the manufacturer and described in the descriptive documentation listed at (16).

This certificate may only be reproduced in its entirety and without any change, schedule included